PCE-N10

Wireless Local Area Network Card
(For 802.11 g/b/n Wireless Networks)

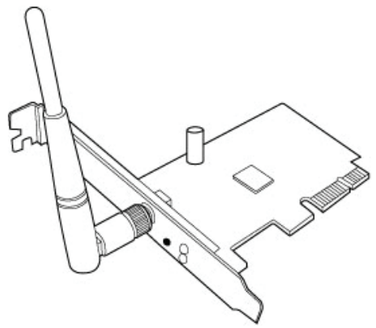

Quick Start Guide

NOTE: For more details and advanced configuration instructions, refer to the user manual included in the Utility CD.

EC Declaration of Conformity

IN SEARCH OF INCREDIBLE

We, the undersigned,

Manufacturer:	ASUSTeK COMPUTER INC.
Address:	4F, No. 150, LI-TE Rd., PEITOU, TAIPEI 112, TAIWAN
Authorized representative in Europe:	ASUS COMPUTER GmbH
Address, City:	HARKORT STR. 21-23, 40880 RATINGEN
Country:	GERMANY

declare the following apparatus:

Product name :	**ASUS 150Mbps 802.11b/g/n Wireless PCI-E card**
Model name :	**PCE-N10**

conform with the essential requirements of the following directives:

☒**2004/108/EC-EMC Directive**

☒ EN 55022:2010	☒ EN 55024:2010
☒ EN 61000-3-2:2006+A2:2009	☒ EN 61000-3-3:2008
☐ EN 55013:2001+A1:2003+A2:2006	☐ EN 55020:2007+A11:2011

☒**1999/5/EC-R&TTE Directive**

☒ EN 300 328 V1.8.1(2012-06)	☒ EN 301 489-1 V1.9.2(2011-09)
☐ EN 300 440-1 V1.6.1(2010-08)	☐ EN 301 489-3 V1.4.1(2002-08)
☐ EN 300 440-2 V1.4.1(2010-08)	☐ EN 301 489-4 V1.4.1(2009-05)
☐ EN 301 511 V9.0.2(2003-03)	☐ EN 301 489-7 V1.3.1(2005-11)
☐ EN 301 908-1 V5.2.1(2011-05)	☐ EN 301 489-9 V1.4.1(2007-11)
☐ EN 301 908-2 V5.2.1(2011-07)	☒ EN 301 489-17 V2.2.1(2012-09)
☐ EN 301 893 V1.6.1(2011-11)	☐ EN 301 489-24 V1.5.1(2010-09)
☐ EN 302 544-2 V1.1.1(2009-01)	☐ EN 302 326-2 V1.2.2(2007-06)
☐ EN 302 623 V1.1.1(2009-01)	☐ EN 302 326-3 V1.3.1(2007-09)
☐ EN 50360:2001	☐ EN 301 357-2 V1.4.1(2008-11)
☐ EN 62479:2010	☐ EN 302 291-1 V1.1.1(2005-07)
☐ EN 50385:2002	☐ EN 302 291-2 V1.1.1(2005-07)
☒ EN 62311:2008	

☐**2006/95/EC-LVD Directive**

☐ EN 60950-1 / A12:2011	☐ EN 60065:2002 / A12:2011

☐**2009/125/EC-ErP Directive**

☐ Regulation (EC) No. 1275/2008	☐ Regulation (EC) No. 278/2009
☐ Regulation (EC) No. 642/2009	☐ Regulation (EC) No. 617/2013

☒**2011/65/EU-RoHS Directive** Ver. 140331

☒**CE marking**

CE

(EC conformity marking)

Position : **CEO**

Name : **Jerry Shen**

Signature : _____

Original Declaration Date: 14/02/2011
Corrected Declaration Date: 23/10/2014
Year to begin affixing CE marking: 2014

Setting up a Home Network

1. Insert the support CD into the optical drive and follow the onscreen instructions to complete the installation.

2. Configure PCE-N10 using ASUS driver.

2.1 Connect to a wireless network using driver.

2.2 Connect to a wireless network on Windows 7.

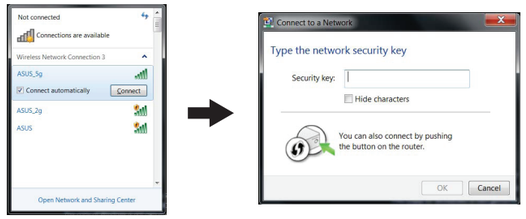

2.3 Connect to a wireless network on Windwos 8 or 8.1.

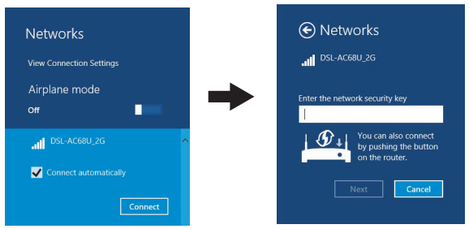

3. Setup is completed.

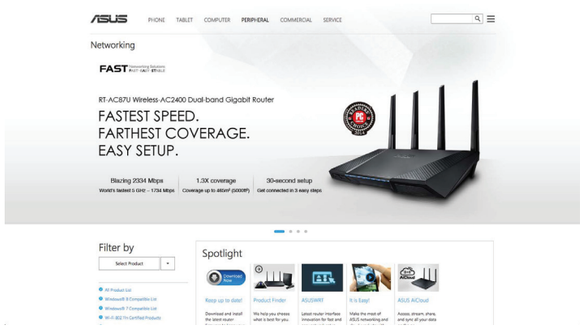

English
1. Insert the support CD into the optical drive and follow the onscreen instructions to complete the installation.
2. Configure PCE-N10 using ASUS driver.
   2.1 Connect to a wireless network using driver.
   2.2 Connect to a wireless network on Windows 7.
   2.3 Connect to a wireless network on Windows 8 or 8.1.
3. Setup is completed.

Deutsch
1. Legen Sie die Support-CD in das optische Laufwerk und folgen Sie den Bildschirmanweisungen, um die Installation fertig zu stellen.
2. PCE-N10 mit ASUS-Treiber konfigurieren.
   2.1 Per Treiber mit einem Drahtlosnetzwerk verbinden.
   2.2 Unter Windows 7 mit einem Drahtlosnetzwerk verbinden.
   2.3 Unter Windows 8 oder 8.1 mit einem Drahtlosnetzwerk verbinden.
3. Die Einrichtung ist fertig.

Italian
1. Inserire il CD di supporto nell'unità ottica e completare l'installazione seguendo le istruzioni sullo schermo.
2. Configurazione di PCE-N10 tramite ASUS driver.
   2.1Connettiti ad una rete wireless tramite driver.
   2.2Connettiti ad una rete wireless con Windows 7.
   2.3Connettiti ad una rete wireless con Windows 8 o 8.1.
3. Configurazione completata.

Lietuvių
1. Įdėkite pagalbos kompaktinį (CD) diską į optinę tvarkyklę ir vadovaukitės nuorodomis ekrane, norėdami baigti įdiegimą.
2. PCE-N10 konfigūruokite naudodami ASUS tvarkyklę .
   2.1 Prie belaidžio tinklo junkitės naudodami tvarkyklę.
   2.2 Prie belaidžio tinklo junkitės „Windows" 7 sistemoje.
   2.3 Prie belaidžio tinklo junkitės „Windows" 8 arba 8.1 sistemoje.
3. Sąranka baigta.

Latviski
1. Ielieciet atbalsta CD optiskajā diskdzinī un izpildiet ekrānā redzamos norādījumus instalācijas veikšanai.
2. Konfigurējiet PCE-N10, izmantojot ASUS draiveri
   2.1 Pievienojieties bezvadu tīklam izmantojot draiveri.
   2.2 Pievienojieties bezvadu tīklam ar Windows 7.
   2.3 Pievienojieties bezvadu tīklam ar Windows 8 vai 8.1.
3. Iestatīšana ir pabeigta.

Português
1. Insira o CD de suporte na unidade óptica e siga as instruções no ecrã para concluir a instalação.
2. Configurar a placa PCE-N10 com o controlador ASUS.
   2.1 Ligar a uma rede sem fios utilizando o controlador.
   2.2 Ligar a uma rede sem fios no Windows 7.
   2.3 Ligar a uma rede sem fios no Windows 8 ou 8.1.
3. A configuração fica assim concluída.

Română
1. Introduceți CD de instalare în drive-ul optic şi urmați instrucțiunile de pe ecran pentru a finaliza instalarea.
2. Configura i dispozitivul PCE-N10 utilizând driverul ASUS.
   2.1 Conecta i-vă la o rețea fără fir utilizând driverul.
   2.2 Conecta i-vă la o rețea fără fir în Windows 7.
   2.3 Conecta i-vă la o rețea fără fir în Windows 8 sau 8.1.
3. Conectarea este finalizată.

Polski
1. Włóż płytę CD z oprogramowaniem do napędu optycznego i postępuj zgodnie z instrukcjami
2. Konfiguracja PCE-N10 z użyciem sterownika ASUS.
   2.1 Połączenie z siecią bezprzewodową z użyciem sterownika.
   2.2 Połączenie z siecią bezprzewodową w Windows 7.
   2.3 Połączenie z siecią bezprzewodową w Windows 8 lub Windows 8.1.
3. Konfiguracja została zakończona.

Español
1. Inserte el CD de soporte en la unidad óptica y siga las instrucciones que aparecerán en la pantalla para llevar a cabo la instalación.
2. Configurar PCE-N10 utilizando el controlador de ASUS.
   2.1 Conectarse a una red inalámbrica utilizando el controlador.
   2.2 Conectarse a una red inalámbrica en Windows 7.
   2.3 Conectarse a una red inalámbrica en Windows 8 u 8.1.
3. Ha finalizado la configuración.

Українська
1. Вставте компакт-диск підтримки до оптичного дисководу і виконуйте інструкції на екрані, щоб завершити інсталяцію.
2. Конфігуруйте PCE-N10 драйвером ASUS.
   2.1 Підключіться драйвером до бездротової мережі.
   2.2 Підключіться до бездротової мережі у Windows 7.
   2.3 Підключіться до бездротової мережі у Windows 8 або 8.1.
3. Налаштування завершено.

Français
1. Insérez le CD de support dans le lecteur optique de votre ordinateur puis suivez les instructions apparaissant à l'écran.
2. Configurer l'adaptateur PCE-N10 avec le pilote ASUS.
   2.1 Se connecter à un réseau sans fil avec le pilote.
   2.2 Se connecter à un réseau sans fil sous Windows 7.
   2.3 Se connecter à un réseau sans fil sous Windows 8 / 8.1.
3. La configuration est terminée.

Nederlands
1. Stop de ondersteunings-cd in het optische station en volg de instructies op het scherm om de installatie te voltooien.
2. PCE-N10 configureren via het ASUS-stuurprogramma.
   2.1 Verbinden met een draadloos netwerk via het stuurprogramma.
   2.2 Verbinden met een draadloos netwerk op Windows 7.
   2.3 Verbinden met een draadloos netwerk op Windows 8 of 8.1.
3. De instelling is voltooid.

Русский
1. Вставьте диск в оптический привод и следуйте инструкциям на экране для завершения установки.
2. Конфигурация PCI-N10 с помощью ASUS утилиты.
   2.1 Подключение к беспроводной сети с помощью драйвера.
   2.2 Подключение к беспроводной сети в Windows 7.
   2.3 Подключение к беспроводной сети в Windows 8/8.1.
3. Настройка завершена.

Eesti
1. Sisestage tugi-CD optilisse kettaseadmesse ja järgige ekraanijuhiseid, et installimine lõpule viia.
2. Konfigureerige seade PCE-N10, kasutades ASUS draiverit.
   2.1 Looge ühendus traadita võrguga, kasutades draiverit.
   2.2 Looge ühendus traadita võrguga platvormil Windows 7.
   2.3 Looge ühendus traadita võrguga platvormil Windows 8 või 8.1.
3. Häälestus on lõpule viidud.

Magyar
1. Helyezze a támogató CD-t az optikai meghajtóba és kövesse a képernyőn megjelenő utasításokat a telepítés elvégzéséhez.
2. A PCE-N10 konfigurálása ASUS illesztőprogram segítségével.
   2.1 Csatlakozás vezeték nélküli hálózathoz illesztőprogram segítségével.
   2.2 Csatlakozás vezeték nélküli hálózathoz Windows 7 alatt.
   2.3 Csatlakozás vezeték nélküli hálózathoz Windows 8 vagy 8.1 alatt.
3. A beállítás befejeződött.

Slovensky
1 Do optickej mechaniky vložte CD s podporou a inštaláciu vykonajte podľa pokynov na obrazovke.
2. Konfigurirajte PCE-N10 z gonilnikom ASUS.
   2.1 V brezžično omrežje se povežite preko gonilnika.
   2.2 V brezžično omrežje se povežite v sistemu Windows 7.
   2.3 V brezžično omrežje se povežite v sistemu Windows 8 ali 8.1.
3 Nastavenie je dokončené.

Čeština
1. Vložte podpůrný disk CD do optické jednotky a dokončete instalaci podle zobrazených pokynů.
2. Konfigurovat PCE-N10 s použitím ovladače ASUS.
   2.1 Připojit k bezdrátové síti s použitím ovladače.
   2.2 Připojit k bezdrátové síti v systému Windows 7.
   2.3 Připojit k bezdrátové síti v systému Windows 8. nebo 8.1.
3. Instalace je dokončena.

Suomi
1. Aseta tuki-CD-levy optiseen asemaan ja suorita asennus loppuun noudattamalla ruudun ohjeita.
2. Määritä PCE-N10 ASUS-ohjaimella.
   2.1 Liitä langattomaan verkkoon ohjaimella.
   2.2 Liitä Windows 7:n langattomaan verkkoon.
   2.3 Liitä Windows 8:n tai 8.1:n langattomaan verkkoon.
3. Asennus on valmis.

български
1. Поставете помощния CD диск в оптичното устройство и следвайте инструкциите на екрана, за да приключите инсталацията.
2. Конфигурирайте PCE-N10 с помощта на драйвер на ASUS.
   2.1 Свързване към безжична мрежа с драйвер.
   2.2 Свързване към безжична мрежа за Windows 7.
   2.3 Свързване към безжична мрежа за Windows 8 или 8.1.
3. Конфигурирането приключи.

Federal Communications Commission Statement

This device complies with Part 15 of the FCC Rules. Operation is subject to the following two conditions:

- This device may not cause harmful interference.
- This device must accept any interference received, including interference that may cause undesired operation.

This equipment has been tested and found to comply with the limits for a class B digital device, pursuant to Part 15 of the FCC Rules. These limits are designed to provide reasonable protection against harmful interference in a residential installation.

This equipment generates, uses and can radiate radio frequency energy and, if not installed and used in accordance with the instructions, may cause harmful interference to radio communications. However, there is no guarantee that interference will not occur in a particular installation. If this equipment does cause harmful interference to radio or television reception, which can be determined by turning the equipment off and on, the user is encouraged to try to correct the interference by one or more of the following measures:

- Reorient or relocate the receiving antenna.
- Increase the separation between the equipment and receiver.
- Connect the equipment into an outlet on a circuit different from that to which the receiver is connected.
- Consult the dealer or an experienced radio/TV technician for help.

CAUTION: Any changes or modifications not expressly approved by the party responsible for compliance could void the user's authority to operate the equipment.

Prohibition of Co-location

This device and its antenna(s) must not be co-located or operating in conjunction with any other antenna or transmitter.

FCC Radiation Exposure Statement

This equipment complies with FCC radiation exposure limits set forth for an uncontrolled environment. This euipment shhould be installed and operated with minimum distance 20cm between the radiator and your body.

CE Mark Warning

This is a Class B product, in a domestic environment, this product may cause radio interference, in which case the user may be required to take adequate measures.

Operation Channels: Ch1~11 for N. America, Ch1~14 Japan, Ch1~13 Europe (ETSI)

DGT Warning Statement

Article 12

Without permission, any company, firm or user shall not alter the frequency, increase the power, or change the characteristic and functions of the original design of the certified lower power frequency electric machinery.

Article 14

The application of lower power frequency electric machineries shall not affect the navigation safety nor interfere a legal communication, if an interference is found, the service will be suspended until improvement is made and the interference no longer exists.

低功率電波輻射性電機管理辦法

(1)「經型式認證合格之低功率射頻電機，非經許可，公司、商號或使用者均不得擅自變更頻率、加大功率或變更原設計之特性及功能」以及(2)「低功率射頻電機之使用不得影響飛航安全及干擾合法通信；經發現有干擾現象時，應立即停用，並改善至無干擾時方得繼續使用。前項合法通信，指依電信法規定作業之無線電通信。低功率射頻電機須忍受合法通信或工業、科學及醫療用電波輻射性電機設備之干擾」。

IC Warning Statement

Under Industry Canada regulations, this radio transmitter may only operate using an antenna of a type and maximum (or lesser) gain approved for the transmitter by Industry Canada. To reduce potential radio interference to other users, the antenna type and its gain should be so chosen that the equivalent isotropically radiated power (e.i.r.p.) is not more than that necessary for successful communication.

This radio transmitter(IC: 3568A-PCEN10) has been approved by Industry Canada to operate with the antenna types listed below with the maximum permissible gain and required antenna impedance for each antenna type indicated. Antenna types not included in this list, having a gain greater than the maximum gain indicated for that type, are strictly prohibited for use with this device.

Ant.	Antenna Type	Connector	Gain (dBi)	Remark
A	Dipole Antenna	Reversed-SMA	5.00	TX / RX
B	Dipole Antenna	Reversed-SMA	3.00	TX / RX
C	Dipole Antenna	Reversed-SMA	3.00	TX / RX
D	Dipole Antenna	Reversed-SMA	2.00	TX / RX
E	Dipole Antenna	Reversed-SMA	2.00	TX / RX

This Class [B] digital apparatus complies with Canadian ICES-003.

Cet appareil numérique de la classe [B] est conforme à la norme NMB-003 du Canada.

For product available in the USA/Canada market, only channel 1~11 can be operated. Selection of other channels is not possible.

IC Radiation Exposure Statement:

This equipment complies with IC RSS-102 radiation exposure limits set forth for an uncontrolled environment. This equipment should be installed and operated with minimum distance 20cm between the radiator & your body.

Operation is subject to the following two conditions: (1) this device may not cause interference, and (2) this device must accept any interference, including interference that may cause undesired operation of the device.

REACH

Complying with the REACH (Registration, Evaluation, Authorisation, and Restriction of Chemicals) regulatory framework, we published the chemical substances in our products at ASUS REACH website at http://csr.asus.com/english/REACH.htm.

Hot Products

RT-N10

- ASUS EZUI with Auto detection, Network Map, Dr. Surf and ZQoS
- 150Mbps wireless speed and delivers 300% more signal coverage than 802.11g
- Provides one more virtual wireless router with bandwidth and access control
- Power by Broadcom Accelerange TM technology

RT-N12

- ASUS EZUI with Auto detection, Network Map, Dr. Surf and ZQoS
- 300Mbps wireless speed and delivers 450% more signal coverage than 802.11g
- Provides three more virtual wireless router with bandwidth and access control
- Power by Broadcom BroadRange TM technology

EC Declaração de Conformidade

Nós, os abaixo assinados,

Fabricante:	ASUSTeK COMPUTER INC.
Morada:	4F, No. 150, LI-TE Rd., PEITOU, TAIPEI 112, TAIWAN
Representante autorizado na Europa:	ASUS COMPUTER GmbH
Morada, Cidade:	HARKORT STR. 21-23, 40880 RATINGEN
País:	GERMANY

declaramos que o seguinte produto:

Nome do Produto :	**ASUS 150Mbps 802.11b/g/n Wireless PCI-E card**
Modelo :	**PCE-N10**

se encontra em conformidade com as exigências essenciais das seguintes directrizes:

☒2004/108/EC-EMC Directiva

☒ EN 55022:2010	☒ EN 55024:2010
☒ EN 61000-3-2:2006+A2:2009	☒ EN 61000-3-3:2008
☐ EN 55013:2001+A1:2003+A2:2006	☐ EN 55020:2007+A11:2011

☒1999/5/EC-R&TTE Directiva

☒ EN 300 328 V1.8.1(2012-06)	☒ EN 301 489-1 V1.9.2(2011-09)
☐ EN 300 440-1 V1.6.1(2010-08)	☐ EN 301 489-3 V1.4.1(2002-08)
☐ EN 300 440-2 V1.4.1(2010-08)	☐ EN 301 489-4 V1.4.1(2009-05)
☐ EN 301 511 V9.0.2(2003-03)	☐ EN 301 489-7 V1.3.1(2005-11)
☐ EN 301 908-1 V5.2.1(2011-05)	☐ EN 301 489-9 V1.4.1(2007-11)
☐ EN 301 908-2 V5.2.1(2011-07)	☒ EN 301 489-17 V2.2.1(2012-09)
☐ EN 301 893 V1.6.1(2011-11)	☐ EN 301 489-24 V1.5.1(2010-09)
☐ EN 302 544-2 V1.1.1(2009-01)	☐ EN 302 326-2 V1.2.2(2007-06)
☐ EN 302 623 V1.1.1(2009-01)	☐ EN 302 326-3 V1.3.1(2007-09)
☐ EN 300 330-1 V1.7.1(2010-02)	☐ EN 301 357-2 V1.4.1(2008-11)
☐ EN 300 330-2 V1.5.1(2010-02)	☐ EN 302 291-1 V1.1.1(2005-07)
☐ EN 50360:2001	☐ EN 302 291-2 V1.1.1(2005-07)
☐ EN 62479:2010	☐ EN 50385:2002
	☒ EN 62311:2008

☐2006/95/EC-LVD Directiva

☐ EN 60950-1 / A12:2011	☐ EN 60065:2002 / A12:2011

☐2009/125/EC-ErP Directiva

☐ Regulation (EC) No. 1275/2008	☐ Regulation (EC) No. 278/2009
☐ Regulation (EC) No. 642/2009	☐ Regulation (EC) No. 617/2013

☒2011/65/EU-RoHS Directiva Ver. 140331

☒Marca de CE

CE (Marca de Conformidade EC)

Posição : **CEO**
Nome : **Jerry Shen**

Data Original da Declaração: 14/02/2011
Data Corrigida da Declaração: 23/10/2014
Ano para começar a aposição da marca CE: 2014

Assinatura : _____

EC Declaratie de Conformitate

Noi, subsemnaţii,

Producător:	ASUSTeK COMPUTER INC.
Adresă:	Strada PEITOU Nr 150, LI-TE etaj 4, TAIPEI 112, TAIWAN
Reprezentant autorizat în Europa:	ASUS COMPUTER GmbH
Adresă, Oraş:	Strada HARKORT Nr 21-23, RATINGEN 40880
Ţară:	Germania

declarăm că următorul aparat:

Nume produs:	**ASUS 150Mbps 802.11b/g/n Wireless PCI-E card**
Nume model:	**PCE-N10**

este conform cu cerinţele esenţiale ale următoarelor directive:

☒Directiva 2004/108/EC-EMC

☒ EN 55022:2010	☒ EN 55024:2010
☒ EN 61000-3-2:2006+A2:2009	☒ EN 61000-3-3:2008
☐ EN 55013:2001+A1:2003+A2:2006	☐ EN 55020:2007+A11:2011

☒Directiva 1999/5/EC-R&TTE

☒ EN 300 328 V1.8.1(2012-06)	☒ EN 301 489-1 V1.9.2(2011-09)
☐ EN 300 440-1 V1.6.1(2010-08)	☐ EN 301 489-3 V1.4.1(2002-08)
☐ EN 300 440-2 V1.4.1(2010-08)	☐ EN 301 489-4 V1.4.1(2009-05)
☐ EN 301 511 V9.0.2(2003-03)	☐ EN 301 489-7 V1.3.1(2005-11)
☐ EN 301 908-1 V5.2.1(2011-05)	☐ EN 301 489-9 V1.4.1(2007-11)
☐ EN 301 908-2 V5.2.1(2011-07)	☒ EN 301 489-17 V2.2.1(2012-09)
☐ EN 301 893 V1.6.1(2011-11)	☐ EN 301 489-24 V1.5.1(2010-09)
☐ EN 302 544-2 V1.1.1(2009-01)	☐ EN 302 326-2 V1.2.2(2007-06)
☐ EN 302 623 V1.1.1(2009-01)	☐ EN 302 326-3 V1.3.1(2007-09)
☐ EN 50360:2001	☐ EN 301 357-2 V1.4.1(2008-11)
☐ EN 62479:2010	☐ EN 302 291-1 V1.1.1(2005-07)
☐ EN 50385:2002	☐ EN 302 291-2 V1.1.1(2005-07)
☒ EN 62311:2008	

☐Directiva 2006/95/EC-LVD

☐ EN 60950-1 / A12:2011	☐ EN 60065:2002 / A12:2011

☐Directiva 2009/125/EC-ErP

☐ Regulation (EC) No. 1275/2008	☐ Regulation (EC) No. 278/2009
☐ Regulation (EC) No. 642/2009	☐ Regulation (EC) No. 617/2013

☒Directiva 2011/65/EU-RoHS Ver. 140331

☒Însemnul CE

CE (Însemnul de conformitate EC)

Poziţia: **CEO**
Nume: **Jerry Shen**

Data declaraţiei iniţiale: 14/02/2011
Data declaraţiei revizuite: 23/10/2014
Anul aplicării însemnului CE: 2014

Semnătura: _____

EC Uygunluk Beyanı

Biz, bu imza altındakiler

Üretici:	ASUSTeK COMPUTER INC.
Adres:	4F, No. 150, LI-TE Rd., PEITOU, TAIPEI 112, TAIWAN
Avrupa'daki Yetkili:	ASUS COMPUTER GmbH
Adres, Şehir:	HARKORT STR. 21-23, 40880 RATINGEN
Ülke:	ALMANYA

Aşağıdaki ürünün

Ürün adı :	**ASUS 150Mbps 802.11b/g/n Wireless PCI-E card**
Model adı :	**PCE-N10**

Aşağıdaki direktiflerin gereksinimlerine uyduğunu deklare ederiz:

☒2004/108/EC-EMC Direktifi

☒ EN 55022:2010	☒ EN 55024:2010
☒ EN 61000-3-2:2006+A2:2009	☒ EN 61000-3-3:2008
☐ EN 55013:2001+A1:2003+A2:2006	☐ EN 55020:2007+A11:2011

☒1999/5/EC-R&TTE Direktifi

☒ EN 300 328 V1.8.1(2012-06)	☒ EN 301 489-1 V1.9.2(2011-09)
☐ EN 300 440-1 V1.6.1(2010-08)	☐ EN 301 489-3 V1.4.1(2002-08)
☐ EN 300 440-2 V1.4.1(2010-08)	☐ EN 301 489-4 V1.4.1(2009-05)
☐ EN 301 511 V9.0.2(2003-03)	☐ EN 301 489-7 V1.3.1(2005-11)
☐ EN 301 908-1 V5.2.1(2011-05)	☐ EN 301 489-9 V1.4.1(2007-11)
☐ EN 301 908-2 V5.2.1(2011-07)	☒ EN 301 489-17 V2.2.1(2012-09)
☐ EN 301 893 V1.6.1(2011-11)	☐ EN 301 489-24 V1.5.1(2010-09)
☐ EN 302 544-2 V1.1.1(2009-01)	☐ EN 302 326-2 V1.2.2(2007-06)
☐ EN 302 623 V1.1.1(2009-01)	☐ EN 302 326-3 V1.3.1(2007-09)
☐ EN 50360:2001	☐ EN 301 357-2 V1.4.1(2008-11)
☐ EN 62479:2010	☐ EN 302 291-1 V1.1.1(2005-07)
☐ EN 50385:2002	☐ EN 302 291-2 V1.1.1(2005-07)
☒ EN 62311:2008	

☐2006/95/EC-LVD Direktifi

☐ EN 60950-1 / A12:2011	☐ EN 60065:2002 / A12:2011

☐2009/125/EC-ErP Direktifi

☐ Regulation (EC) No. 1275/2008	☐ Regulation (EC) No. 278/2009
☐ Regulation (EC) No. 642/2009	☐ Regulation (EC) No. 617/2013

☒2011/65/EU-RoHS Direktifi Ver. 140331

☒CE işareti

CE (EC uygunluk işareti)

Pozisyon : **CEO**
İsim : **Jerry Shen**

Orjinal Deklerasyon Tarihi: 14/02/2011
Düzeltilmiş Deklerasyon Tarihi: 23/10/2014
CE İşaretinin Eklendiği Yıl: 2014

İmza : _____

Manufacturer

ASUSTeK Computer Inc.
Tel: +886-2-2894-3447
Address: 4F, No. 150, LI-TE RD., PEITOU, TAIPEI 112, TAIWAN

Authorised representative in Europe

ASUS Computer GmbH
Address: HARKORT STR. 21-23, D-40880 RATINGEN, DEUTSCHLAND

Authorised distributors in Turkey

BOGAZICI BIL GISAYAR SAN. VE TIC. A.S.
Tel: +90 212 3311000
Address: AYAZAGA MAH. KEMERBURGAZ CAD. NO.10 AYAZAGA/ISTANBUL

INDEX BILGISAYAR SISTEMLERI MUHENDISLIK SAN. VE TIC. A.S.
Tel: +90 212 3312121
Address: AYAZAGA MAH. CENDERE YOLU NO.9 AYAZAGA/ISTANBUL

EEE Yönetmeliğine Uygundur.